BL1118

Dual 1A Low Dropout Regulator

DESCRIPTION

BL1118 is a dual channel low-dropout regulator that delivers a maximum current of 1A for each individual output. Typical dropout voltage at 1A load current is 1.3V. Each individual output voltage can be set independently as fixed voltage (e.g 1.2V, 1.8V, 2.5V, 3.3V, 5V) or adjustable output which can provide an output voltage from 1.25 to 12V with two external resistors. The output accuracy of each channel is set within 2% by trimming.

BL1118 offers thermal shut down and current limit functions to ensure reliability of device and power system.

Package input/output pin configuration can be customized on demand (i.e both output can share one input to save one input capacitor and corresponding PCB real estate).

BL1118 is available in lead (Pb)-free ESOP-8(with exposed pad for heat dissipation) package.

FEATURES

- Dual channel output with each individual output can be either fixed output version or adjustable version.
- Maximum output current for each channel is 1A
- Range of operation input voltage: Max 12V
- Standby current of each output: 2mA (typ.)
- Line regulation: 0.1%/V (typ.)
- Load regulation: 10mV (typ.)
- Environment Temperature: -20°C~85°C
- Compatible with tantalum capacitor, electrolytic capacitor and MLCC.

APPLICATIONS

- Power Management for Computer Mother Board, Graphic Card
- LCD Monitor and LCD TV
- DVD Decode Board
- ADSL Modem
- Post Regulators for Switching Supplies

TYPICAL APPLICATION

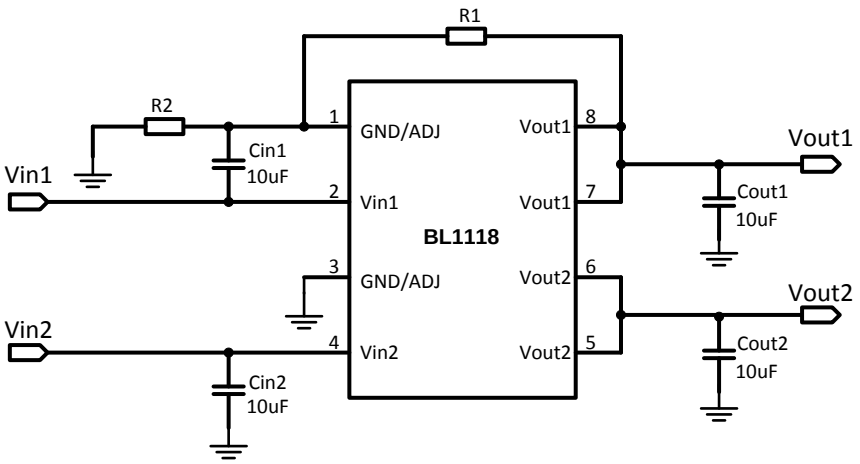

Fig.1. Typical Application of BL1118

ORDERING INFORMATION

BL1118 ①②③④⑤

Code	Description
①	Temperature&Rohs: C:-40~85°C , Pb Free Rohs Std.
②	Package type: S8: ESOP-8
③	Packing type: TR: Tape&Reel (Standard)
④	CH1 Output voltage: e.g. 33=3.3V AD=ADJ
⑤	CH2 Output voltage: e.g. 33=3.3V AD=ADJ

MARKING DESCRIPTON

Marking		BL1118CS8TR□□□□
1118	Product Code	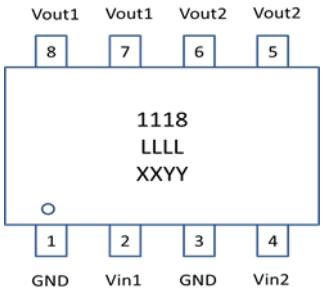
LLLL	Lot No.	
XXYY	XX： Vo1 Output Voltage YY： Vo2 Output Voltage	

PIN CONFIGURATION

PIN	Symbol	Description
1	GND	Ground
2	Vin1	Channel 1 Input
3	GND	Ground
4	Vin2	Channel 2 Input
5	Vout2	Channel 2 Output
6	Vout2	Channel 2 Output
7	Vout1	Channel 1 Output
8	Vout1	Channel 1 Output

ABSOLUTE MAXIMUM RATING

Parameter		Value
Max Input Voltage		12V
Operating Junction Temperature(Tj)		125°C
Ambient Temperature(Ta)		-20°C -85°C
Package Thermal Resistance (θjc)	ESOP8	10°C / W
Storage Temperature(Ts)		-40°C -150°C
Lead Temperature & Time		260°C,10S

Note:

1) Exceed these limits to damage to the device.

2) Exposure to absolute maximum rating conditions may affect device reliability.

RECOMMENDED WORK CONDITIONS

Parameter	Value
Input Voltage Range	Max. 12V
Ambient Temperature	-20°C ～ 85°C

ELECTRICAL CHARACTERISTICS

**For each individual channel output*
Test Conditions: Cin=0.1uF, Cout=10uF, T_A=25℃, unless otherwise specified.

Symbol	Parameter	Conditions	Min	Typ	Max	Unit
Vref	Reference Voltage	BL1118-ADJ 10mA≤Iout≤1A , Vin=3.25V	1.225	1.25	1.275	V
Vout	Output Voltage	BL1118-1.2V 0≤Iout≤1A , Vin=3.2V	1.176	1.2	1.224	V
		BL1118-1.8V 0≤Iout≤1A , Vin=3.8V	1.764	1.8	1.836	V
		BL1118-2.5V 0≤Iout≤1A , Vin=4.5V	2.45	2.5	2.55	V
		BL1118-3.3V 0≤Iout≤1A , Vin=5.3V	3.234	3.3	3.366	V
		BL1118-5.0V 0≤Iout≤1A , Vin=7.0V	4.9	5	5.1	V
ΔVout	Line Regulation	BL1118-1.2V Iout=10mA, 2.7V≤Vin≤10V		0.1	0.2	%/V
		BL1118-ADJ Iout=10mA, 2.75V≤Vin≤12V		0.1	0.2	%/V
		BL1118-1.8V Iout=10mA, 3.3V≤Vin≤12V		0.1	0.2	%/V
		BL1118-2.5V Iout=10mA, 4.0V≤Vin≤12V		0.1	0.2	%/V
		BL1118-3.3V Iout=10mA, 4.8V≤Vin≤12V		0.1	0.2	%/V
		BL1118-5.0V Iout=10mA, 6.5V≤Vin≤12V		0.1	0.2	%/V
ΔVout	Load Regulation	BL1118-ADJ Vin =2.75V, 10mA≤Iout≤1A		10	30	mV
		BL1118-ADJ Vin =2.75V, 10mA≤Iout≤1A		10	30	mV
		BL1118-1.8V Vin=3.3V, 10mA≤Iout≤1A		10	30	mV
		BL1118-2.5V Vin=4.0V, 10mA≤Iout≤1A		10	30	mV
		BL1118-3.3V Vin=4.8V, 10mA≤Iout≤1A		10	30	mV
		BL1118-5.0V Vin=6.5V, 10mA≤Iout≤1A		10	30	mV

ELECTRICAL CHARACTERISTICS continued

Symbol	Parameter	Conditions	Min	Typ	Max	Unit
Vdrop	Dropout Voltage	Iout=100mA		1.23	1.3	V
		Iout=1A		1.3	1.5	V
I_{limit}	Current Limit	Vin-Vout=2V, Tj=25°C	1			A
I_{min}	Minimum Load Current	BL1118-ADJ		2	10	mA
Iq	Quiescent Current	BL1118-1.2V, Vin =10V		2	5	mA
		BL1118-1.8V, Vin =12V		2	5	mA
		BL1118-2.5V,Vin =12V		2	5	mA
		BL1118-3.3V, Vin =12V		2	5	mA
		BL1118-5.0V, Vin =12V		2	5	mA
I_{Adj}	Adjust Pin Current	BL1118-ADJ Vin =5V, 10mA≤Iout≤1A		55	120	uA
Ichange	Iadj change	BL1118-ADJ Vin =5V, 10mA≤Iout≤1A		0.2	10	uA
ΔV/ΔT	Temperature coefficient			±100		ppm
θ_{JA}	Junction-Ambient Thermal Resistance	ESOP-8		63		°C/W

Note:

1) All test are conducted under ambient temperature 25°C and within a short period of time 20ms

2) Load current smaller than minimum load current of BL1118-ADJ will lead to unstable or oscillation output.

BLOCK DIAGRAM

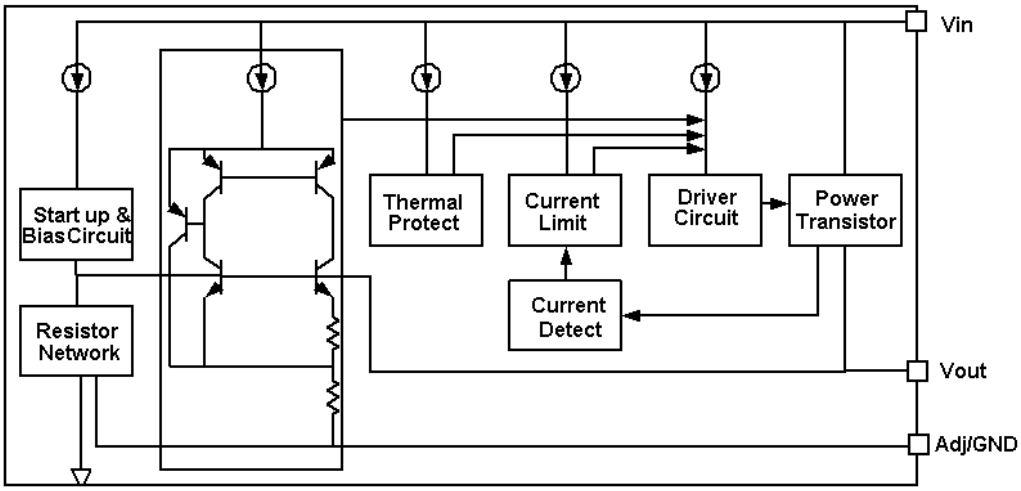

Fig.2 Block Diagram for each individual Channel

DETAILED DESCRIPTION

BL1118 is a series of dual channel low-dropout regulator that delivers a maximum current of 1A for each individual output. Typical dropout voltage at 1A load current is 1.3V. Each individual output voltage can be set independently as fixed voltage (i.e. 1.2V, 1.8V, 2.5V, 3.3V, 5V) or adjustable output which can provide an output voltage ranges from 1.25 to 12V with two external resistors. The output accuracy of each channel is set within 2% by trimming.

The device has build-in modules including start-up circuit, bias circuit, bandgap, thermal shutdown, current limit, power transistors and driver circuit. Thermal shut down and current limit functions ensure reliability of device and power system.

The bandgap module provides stable reference voltage whose temperature coefficient is compensated by careful design considerations. The temperature coefficient is under 100 ppm/°C. The accuracy of output voltage is guaranteed by trimming technique.

Package input/output pin configuration can be customized on demand (i.e both output can share one input to save one input capacitor and corresponding PCB real estate).

BL1118 is available in lead (Pb)-free ESOP-8 package.

TYPICAL APPLICATION

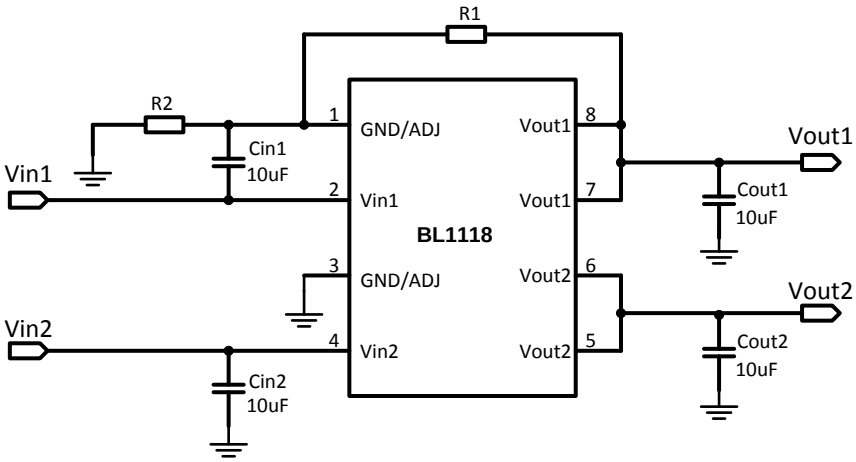

Fig.3. Typical Application Schematic of BL1118

BL1118 has both fixed voltage version (1.2V, 1.8V, 2.5V, 3.3V, 5V) and adjustable voltage version. The input and output capacitors of each channel can be either tantalum, electrolytic or ceramic capacitor.

Figure 3 shows both fixed voltage and adjustable voltage application schematic. Channel 1 (designated as pin 1\2\7\8) is a typical application of fixed voltage. Channel 2 (designated as pin 3\4\5\6) is the schematic of adjustable version application. The adjustable version provides a 1.25V reference voltage with regard to its ADJ pin (shown as PIN 5\6 as its output and PIN3 as its adjustable pin in Fig.3). The output voltage of adjustable version follows the equation:

$V_{out}=1.25\times(1+R_2/R_1)+I_{Adj}\times R_2$.

We can ignore I_{Adj} because I_{Adj} (about 50uA) is much less than the current of R1 (in the order of several milliamps).

1) To meet the minimum load current (>10mA) requirement, R1 is recommended to be 125ohm or lower.

2) Using a bypass capacitor (C_{ADJ}) between the ADJ pin and ground can improve ripple rejection. This bypass capacitor prevents ripple from being amplified as the output voltage is increased. The impedance of C_{ADJ} should be less than R1 to prevent ripple from being amplified. As R1 is normally in the range of 100Ω~500Ω, the value of C_{ADJ} should satisfy this equation: $1/(2\pi\times f_{ripple}\times C_{ADJ})<R1$.

THERMAL CONSIDERATIONS

Thermal consideration has to be taken account into to ensure proper function of the device. Power dissipation of BL1118 can be calculated as

Power Dissipation = (Vin1-Vout1)×Iout1+ (Vin2-Vout2)×Iout2

For proper function and safe operation of the device, power dissipation is recommended to be limited within 2W.

TYPICAL PERFORMANCE CHARACTERISTICS

T=25°C unless specified.

Line Regulation

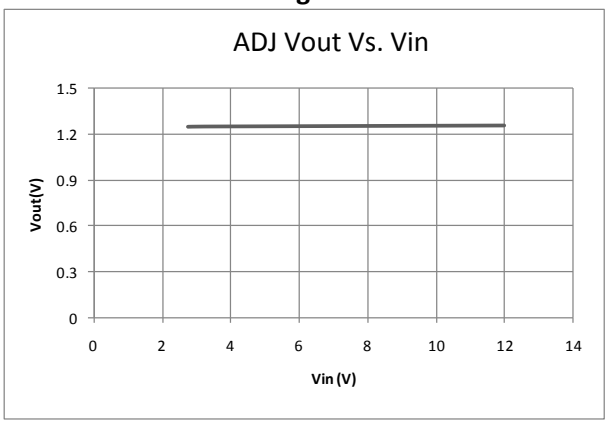

Load Regulation

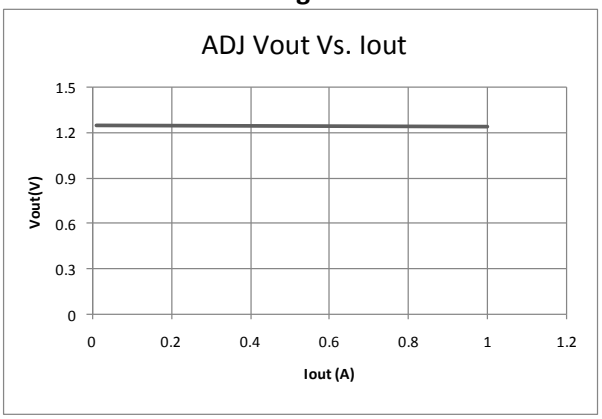

Dropout Voltage

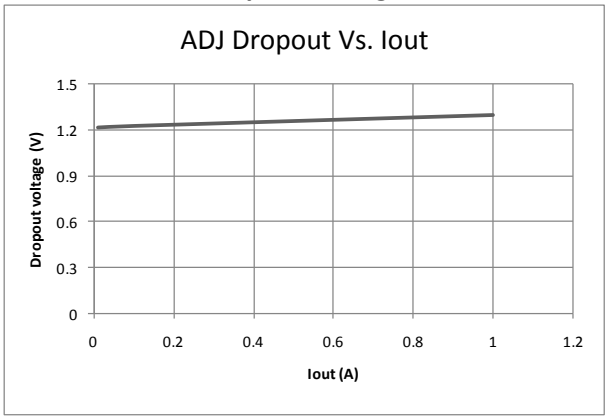

Thermal performance with OTP

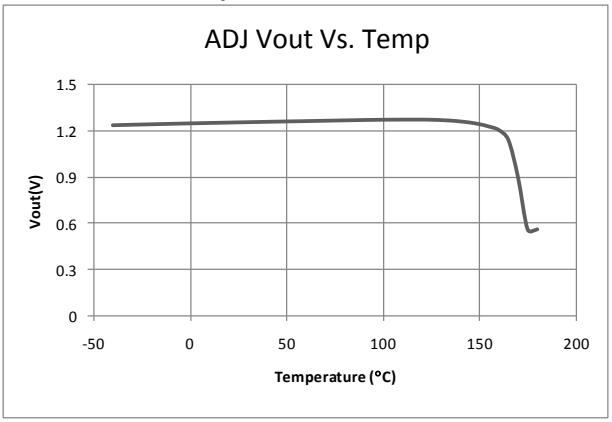

PACKAGE OUTLINE

Package	ESOP-8	Devices per reel	2500Pcs	Unit	mm

Package specification：

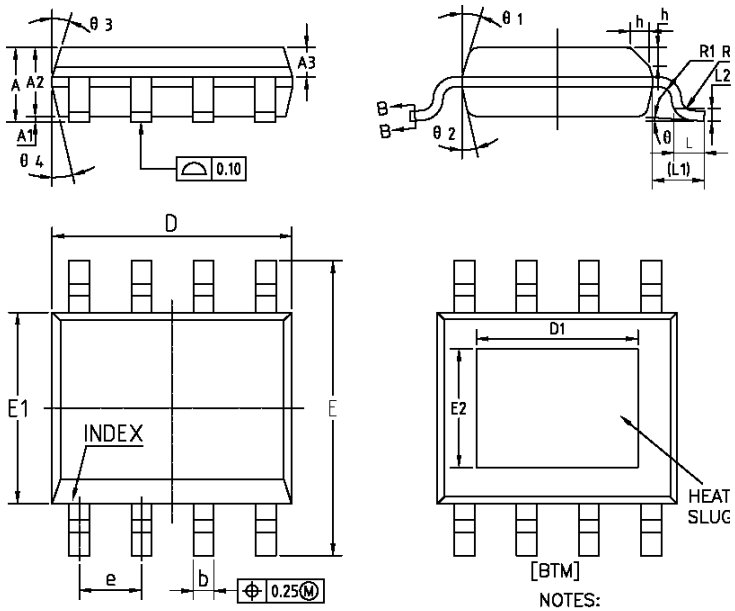

COMMON DIMENSIONS
(UNITS OF MEASURE=MILLIMETER)

SYMBOL	MIN	NOM	MAX
A	1.35	1.55	1.75
A1	0	0.10	0.15
A2	1.25	1.40	1.65
A3	0.50	0.60	0.70
b	0.38	–	0.51
b1	0.37	0.42	0.47
c	0.17	–	0.25
c1	0.17	0.20	0.23
D	4.80	4.90	5.00
D1	3.10	3.30	3.50
E	5.80	6.00	6.20
E1	3.80	3.90	4.00
E2	2.20	2.40	2.60
e	1.27BSC		
L	0.45	0.60	0.80
L1	1.04REF		
L2	0.25BSC		
R	0.07	–	–
R1	0.07	–	–
h	0.30	0.40	0.50
θ	0°	–	8°
θ1	15°	17°	19°
θ2	11°	13°	15°
θ3	15°	17°	19°
θ4	11°	13°	15°

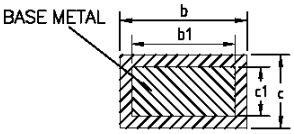

SECTION B–B

NOTES:
ALL DIMENSIONS REFER TO JEDEC STANDARD MS–012 AA
DO NOT INCLUDE MOLD FLASH OR PROTRUSIONS.